SLEIPNER
Ocean born. Tech bred.

Installation Guide

For Automatic Main Switch
897612, 897624

SLEIPNER AS
P.O. Box 519
N-1612 Fredrikstad
Norway
www.sleipnergroup.com

DOCUMENT ID: 5196
REVISION: 3
DATE: 2021
LANGUAGE: EN
IM

Contents

Installation Instructions

Considerations and Precautions..... 3
Measurements 4
Specifications 5
AMS installation..... 6
Electrical Specifications 7
Wiring Diagram ..... 8 - 10
Service 11

Spare Parts 12

Warranty statement 12

Products

SM901970 | 897612 - Auto-Mainswitch 12V
SM901971 | 897624 - Auto-Mainswitch 24V

DECLARATION OF CONFORMITY

MC_0020

CE

Sleipner Motor AS
P.O. Box 519, Arne Svendsensgt. 6-8
N-1612 Fredrikstad, Norway

Declare that this product with accompanying standard control systems complies with the essential health and safety requirements according to:

DIRECTIVE 2013/53/EU
DIRECTIVE 2014/30/EU
DIRECTIVE 2014/35/EU

It is the installers responsibility

When installing Sleipner equipment follow the outlined regulations/ classification rules (electrical/ mechanical) according to international or special national regulations. Instructions in this guide cannot be guaranteed to comply with global electric/ mechanic regulations/ classification rules.

Follow all health and safety laws in accordance with their local outlined regulations/ classification rules.

Before installation, it is important that the installer reads this guide to ensure necessary acquaintance with the product.

The recommendations made in this manual are guidelines ONLY, and Sleipner Motor AS (Sleipner) strongly recommend that before installation, advice is obtained from a naval architect familiar with the particular vessel and regulations/ classifications. This manual is intended to support educated/ experienced staff and is therefore not sufficient in all details for professional installation. *(NB: These instructions are only general instruction. If you are not skilled to do this work, please contact professional installers for assistance.)*

All electrical work must be done by a licensed professional.

Faulty installation of Sleipner products will render all warranty given by Sleipner Motor AS void. MC_0038

EN

Considerations and Precautions

MC_0273

IMPORTANT

This manual is to be used in addition to the regular installation manual for the Sidepower thruster. This manual is intended for professionals only.

- Install the automatic main switch as close to the battery(ies) as possible.
- Do not connect the Sleipner automatic main switch with other products than appropriate original Sidepower control panels or other Sidepower control devices. (NB: Sleipner products are specifically designed with a separate fifth control cable for the automatic main switch.)
- The automatic main switch must be installed so that it keeps dry at all times.
- The automatic main switch can NOT be fitted in spaces requiring Ignition protected equipment.
- Ensure to use the correct fuse for the main switch depending on the thruster model installed.

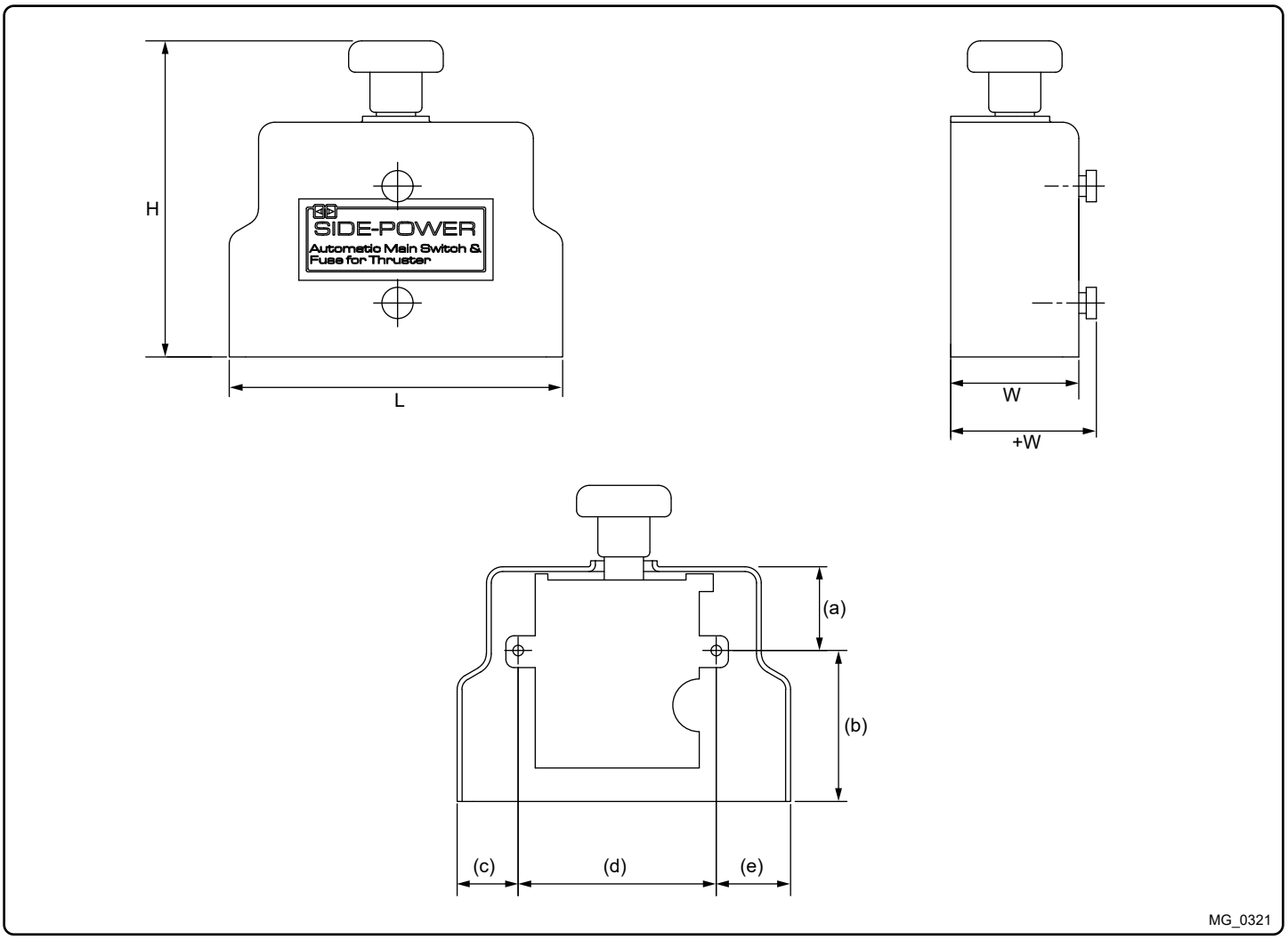

EN

Thruster Measurements

MC_0274

Measurement code	Measurement description	AMS mm	AMS inch
H	Height	194.3	7.6
L	Length	205	8.1
W	Width	79	3.11
+ W	Width including fasteners	90	3.54
(a)	Attachment hole from the top	51.5	2.03
(b)	Attachment hole from the bottom	92.8	3.65
(c)	Attachment hole from the side	37.5	1.5
(d)	Distance between attachment hole	121.8	4.8
(e)	Attachment hole from the side	45.7	1.8

Automatic Main Switch

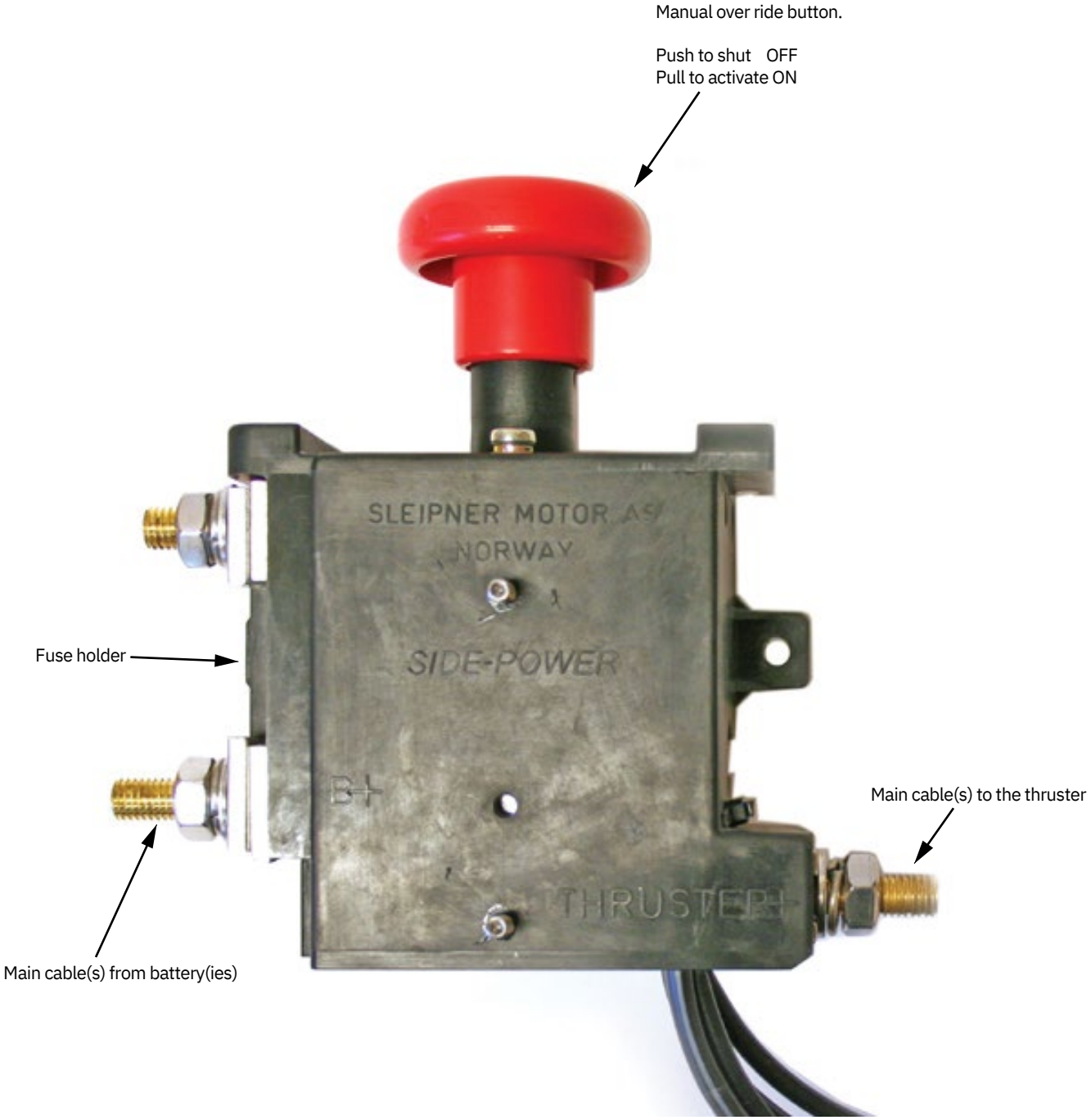

MG_0327

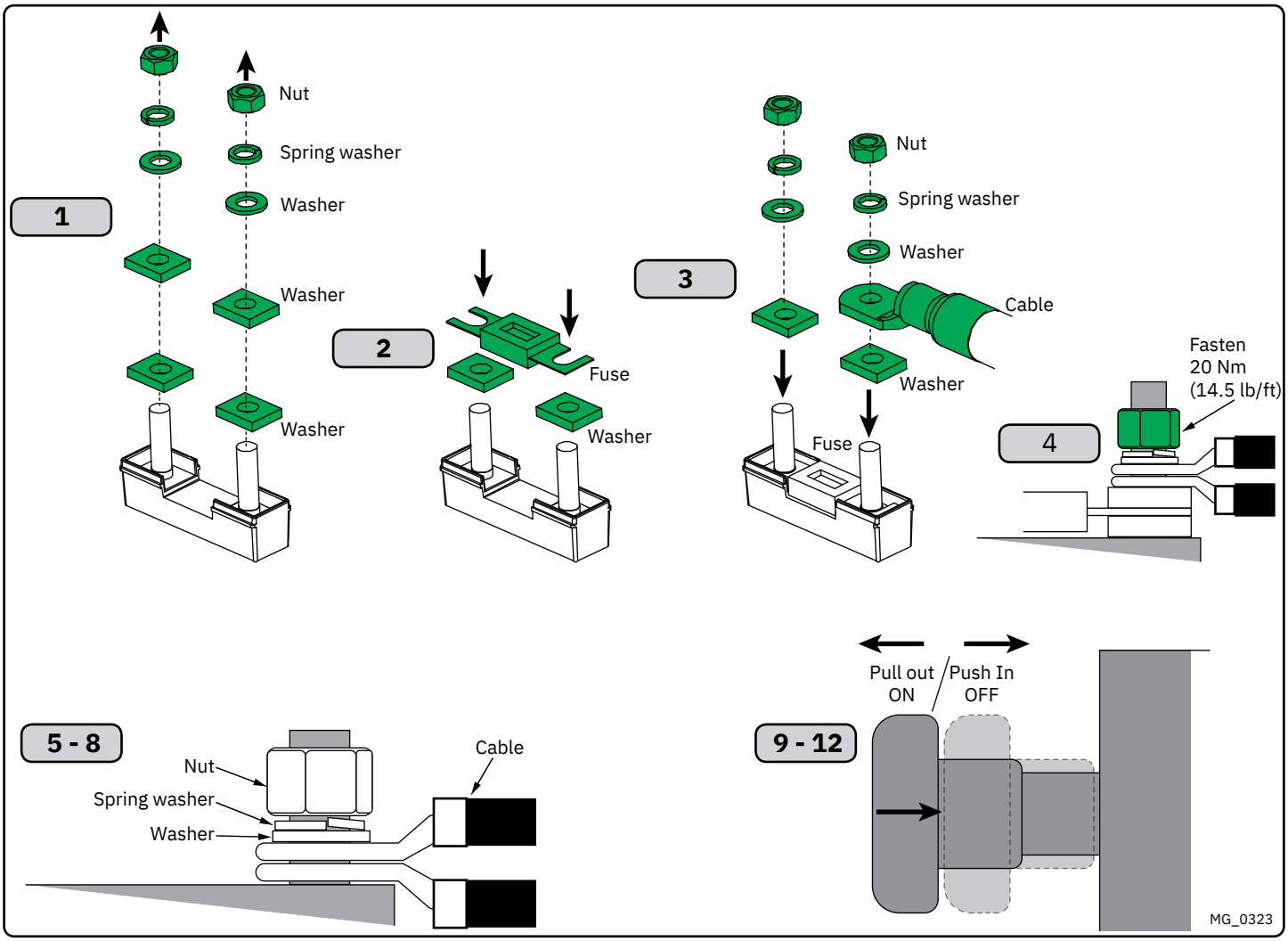

EN AMS Installation

MC_0275

! *Please refer to the graphic for special considerations relating to your model* !

Installing the fuse and battery cables.

1. Remove the nuts and all the washers.
2. Install the fuse on top of the pre-fitted conductors and washer.
3. Assemble the washers, battery cables and end washer and nuts.
4. Tighten the end nut to torque as shown above. ***(NB: Be cautious tightening the brass conductors as they are softer than steel bolts.)***

Fitting the thruster cables.

5. Remove the nuts and washers.
6. Fit the cable/ cables as shown directly onto the pre-fitted conductor.
7. Assemble the washers in the sequence shown.
8. Tighten the end nut.

Manual override button.

9. Pull OUT for ON.
10. Push IN for OFF.
11. Leave the switch in ON position when on-board.
12. Ensure the switch is in the OFF position when leaving the boat for long periods or when installing or servicing the thruster system.

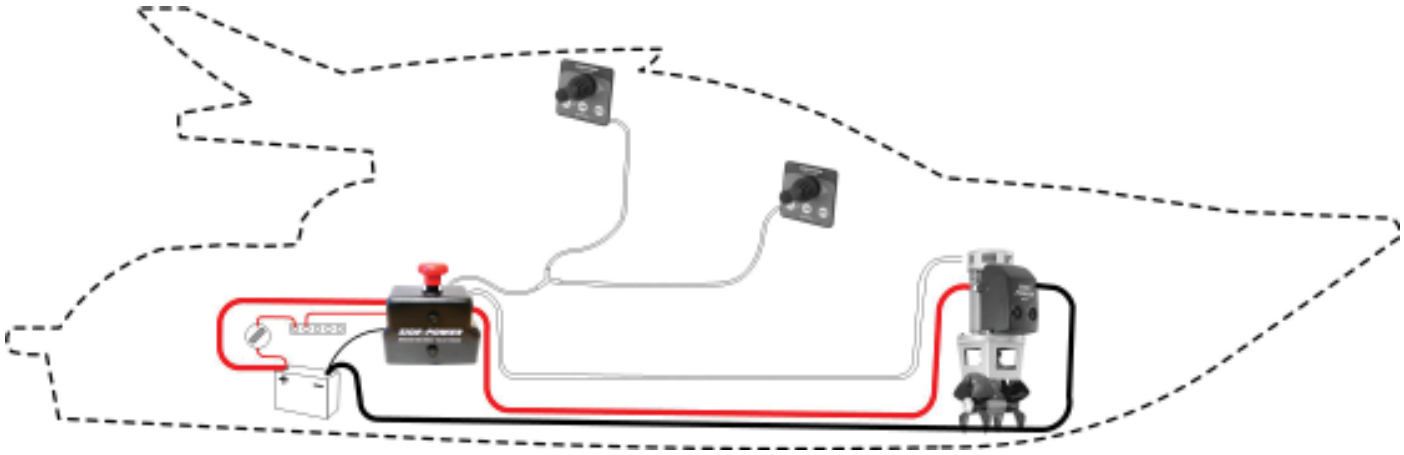

MG_0322

EN

Electrical Installation

MC_0276

!** Please refer to the graphic for special considerations relating to your model **!

ON/ OFF configuration
Use a 4-lead control cable between the thruster and the automatic main switch. (***NB: Only 3 leads are used, The red wire is not connected into the automatic main switch.)***

Proportional configuration
Use 5-lead control cables between the automatic main switch and control panels. ***(NB: use 5-lead Y-connectors to branch off to all controls fitted.)***

Refer to the table in the thrusters manual for deciding the main cable sizes, the lengths are the total of positive and negative from the battery.

WARNING
Check the following with the main switch is set to off :
After all electrical connections have been completed check with an ohm meter that there is no electrical connection between
1. electro-motor flange and the positive terminal on the motor
2. electro-motor flange and the battery negative terminal on the motor

If unsure contact skilled personnel.

Technical Wiring Diagram

Single Thruster Wiring

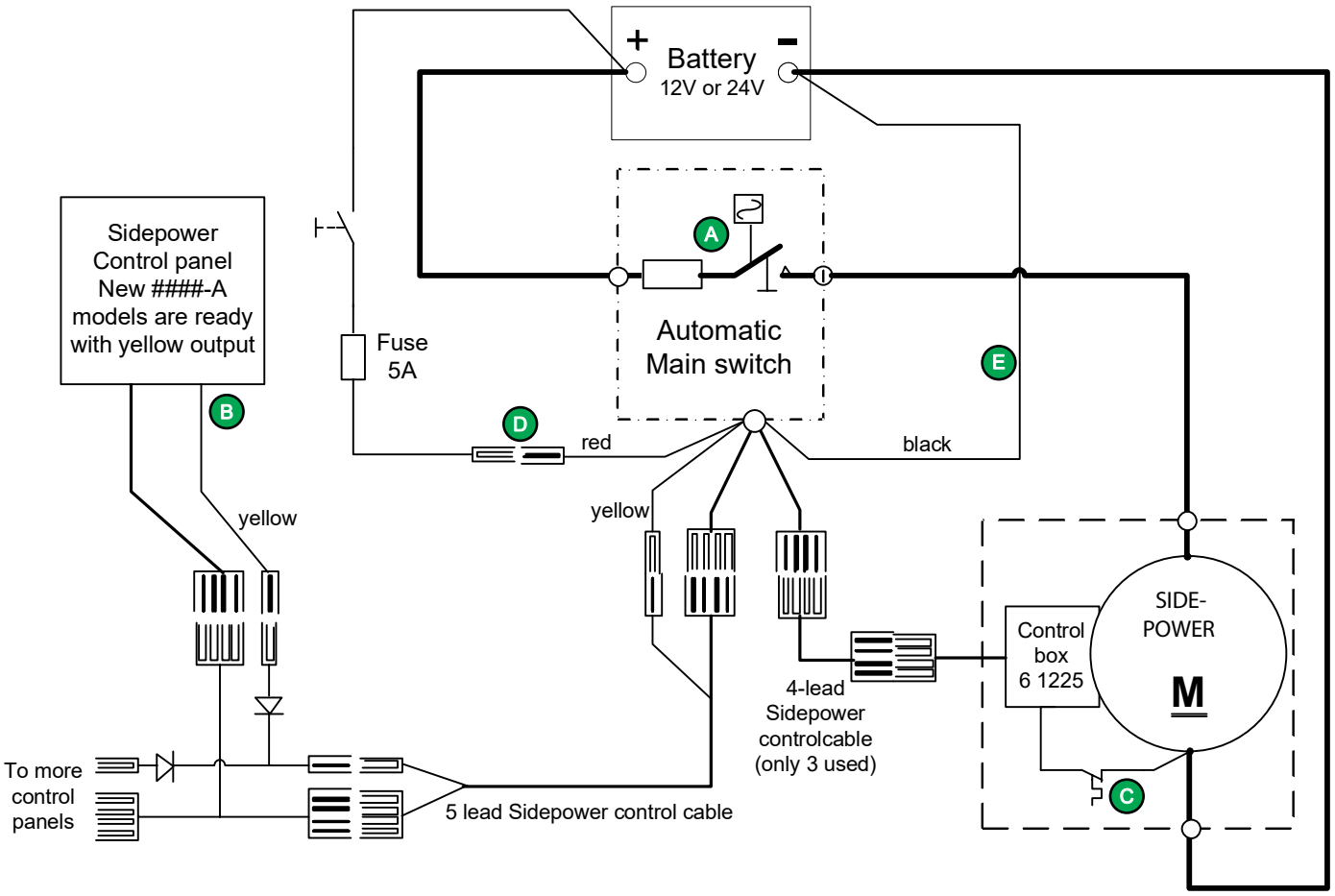

A Main switch with fuse, 12 or 24V version.
(Select fuse size depending on the thruster.)

B ON/OFF thruster panel(s).

C Thermal switch built into the thruster motor.

D Power feed fused to protect the wire.

E Negative power feed for the solenoid.

MG_0324

Dual Thruster Wiring

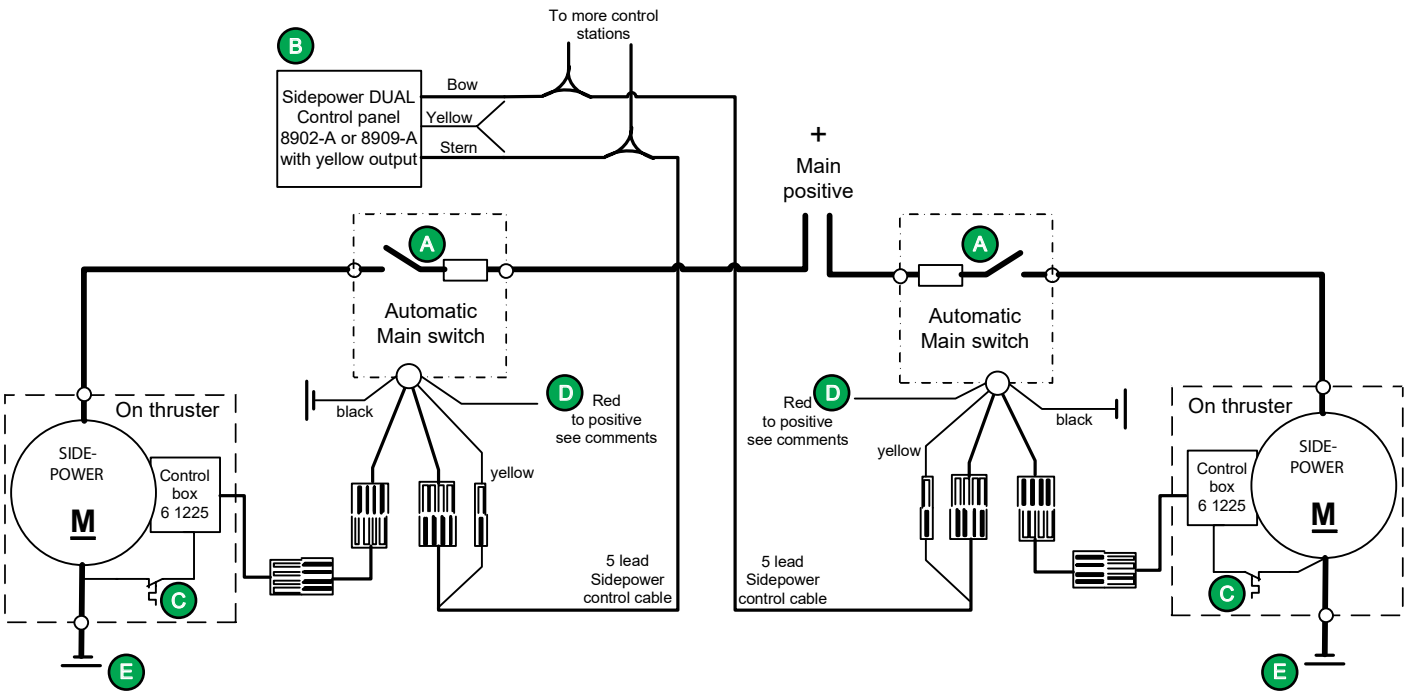

A Main switch with fuse, 12 or 24V version.
(Select fuse size depending on the thruster.)

B ON/OFF thruster panel(s).

C Thermal switch built into the thruster motor.

D Power feed fused to protect the wire.

E Negative power feed for the solenoid.

MG_0325

Technical Wiring Diagram

Wiring with series/ parallel switch box installation

IMPORTANT
Do NOT use an automatic main switch between Batt 1 and Batt 2. This will prevent charging of batt.2.
The main switch between the batteries are only for emergencies and should be left in the ON position except in emergencies.

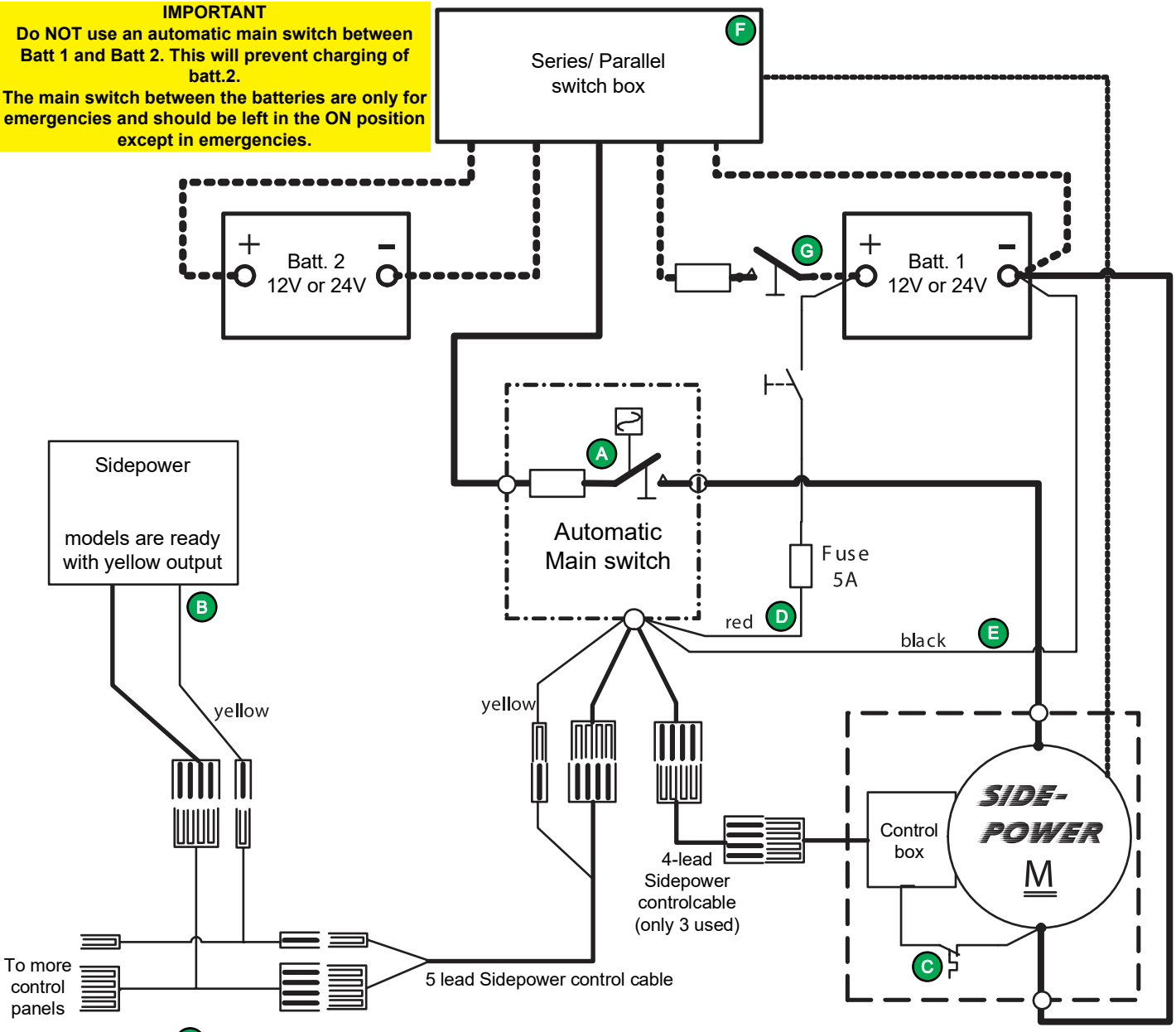

A Main switch with fuse, 12 or 24V version.
(Select fuse size depending on the thruster.)

B ON/OFF thruster panel(s).

C Thermal switch built into the thruster motor.

D Power feed fused to protect the wire.

E Negative power feed for the solenoid.

F Install and wire series/ parallel box that replaces the fuse and main switch between batt. 2 and the thruster with the automatic main switch.
(Dotted lines show schematically the other main cables used when fitting a series/parallel system.)

G A fuse and manual main switch fitted between battery bank 1 and the series/ parallel switch box for shutdown in case of a fault.
(Recommended to be left on at all times to ensure charge of "Batt. 2". Only disconnect when installing/ servicing or in case of a failure.)

IMPORTANT
Only versions 897512A and 897524A is compatible with series/ parallel box installations

MG_0326

! *Please refer to the graphic for special considerations relating to your model* **!**

Service/ maintenance

on all-electric equipment regularly Ensure:
- Equipment is clean and dry.
- Ensure all cable and other connections are tight and without signs of excessive heat or corrosion.

Troubleshooting

The control panel will not activate:
- Ensure the automatic main switch receives positive feed over its red thin lead.
  (NB: If this goes over another main switch in the boat, make sure that this is ON.)

- Check the internal overheat switch (bi-metal switch on the circuit board) in the automatic main switch has not opened.
  (NB: It automatically resets if it is open while the main switch is cold, contact your nearest Sleipner service for assistance.)

- Check 5A fuse installed on the red positive cable to the automatic main switch.

- Check the overheat switch in the electro motor has not blown due to excessive heat.

- Check all control cable connections against the wiring diagrams in the thrusters manual are correct.

The control panel activates, but the thruster will not run:
- Ensure the manual over-ride knob is in “ON” position (pulled out).

- Check that the main power fuse in the automatic main switch is not blown.
  (NB: if so, ensure that it is the right size. If it is the correct size but the fuse continues to blow, the reason for this must be identified.)

- Check the main switch activates when the control panel is activated. If not, check the wiring, especially that you have a constant separate negative feed (thin black lead) and the control panel is feeding a positive into the yellow lead.

- Check there is power supplied to the thruster. If it is not while the previous points are checked OK, the main cables must be checked.

- If there is power at the thruster, measure the voltage at the main battery cable connection points into the thruster while running the thruster.
  (NB: If below 8,5V (12V system) or 16V (24V system) Check the batteries and main cables to find the reason for the voltage drop.)

Read the troubleshooting guide in the thrusters manual.
If you are unable to identify and resolve the problem, contact the nearest Sidepower service point for assistance. Have the notes from your troubleshooting handy to inform the service person of what you have already checked and observed.

Find your local professional dealer from our certified worldwide network for expert service and support.

visit our website www.sleipnergroup.com/support

EN Product Spare Parts and Additional Resources

MC_0024

For additional supporting documentation, we advise you to visit our website www.sleipnergroup.com and find your Sleipner product.

EN Warranty statement

MC_0024

1. Sleipner Motor AS (The "Warrantor") warrants that the equipment (parts, materials and embedded software of products) manufactured by the Warrantor is free from defects in workmanship and materials for the purpose for which the equipment is intended and under normal use and service (the "Warranty").
2. This Warranty is in effect for two years (Leisure Use) or one year (Commercial and other Non-leisure Use) from the date of purchase by the end user (for demonstration vessels, the dealer is deemed as end user).
3. This Warranty is transferable and covers the equipment for the specified warranty period.
4. The warranty does not apply to defects or damages caused by faulty installation or hook-up, abuse or misuse of the equipment including exposure to excessive heat, salt or fresh water spray, or water immersion except for equipment specifically designed as waterproof.
5. In case the equipment seems to be defective, the warranty holder (the "Claimant") must do the following to make a claim:
   (a) Contact the dealer or service centre where the equipment was purchased and make the claim. Alternatively, the Claimant can make the claim to a dealer or service centre found at www.sleipnergroup.com. The Claimant must present a detailed written statement of the nature and circumstances of the defect, to the best of the Claimant's knowledge, including product identification and serial nbr., the date and place of purchase and the name and address of the installer. Proof of purchase date should be included with the claim, to verify that the warranty period has not expired;
   (b) Make the equipment available for troubleshooting and repair, with direct and workable access, including dismantling of furnishings or similar, if any, either at the premises of the Warrantor or an authorised service representative approved by the Warrantor. Equipment can only be returned to the Warrantor or an authorised service representative for repair following a pre-approval by the Warrantor's Help Desk and if so, with the Return Authorisation Number visible postage/shipping prepaid and at the expense of the Claimant.
6. Examination and handling of the warranty claim:
   (a) If upon the Warrantor's or authorised service Representative's examination, the defect is determined to result from defective material or workmanship in the warranty period, the equipment will be repaired or replaced at the Warrantor's option without charge, and returned to the Purchaser at the Warrantor's expense. If, on the other hand, the claim is determined to result from circumstances such as described in section 4 above or a result of wear and tear exceeding that for which the equipment is intended (e.g. commercial use of equipment intended for leisure use), the costs for the troubleshooting and repair shall be borne by the Claimant;
   (b) No refund of the purchase price will be granted to the Claimant, unless the Warrantor is unable to remedy the defect after having a reasonable number of opportunities to do so. In the event that attempts to remedy the defect have failed, the Claimant may claim a refund of the purchase price, provided that the Claimant submits a statement in writing from a professional boating equipment supplier that the installation instructions of the Installation and Operation Manual have been complied with and that the defect remains.
7. Warranty service shall be performed only by the Warrantor, or an authorised service representative, and any attempt to remedy the defect by anyone else shall render this warranty void.
8. No other warranty is given beyond those described above, implied or otherwise, including any implied warranty of merchantability, fitness for a particular purpose other than the purpose for which the equipment is intended, and any other obligations on the part of the Warrantor or its employees and representatives.
9. There shall be no responsibility or liability whatsoever on the part of the Warrantor or its employees and representatives based on this Warranty for injury to any person or persons, or damage to property, loss of income or profit, or any other incidental, consequential or resulting damage or cost claimed to have been incurred through the use or sale of the equipment, including any possible failure or malfunction of the equipment or damages arising from collision with other vessels or objects.
10. This warranty gives you specific legal rights, and you may also have other rights which vary from country to country.

EN Patents

MC_0024

At Sleipner we continually reinvest to develop and offer the latest technology in marine advancements. To see the many unique designs we have patented visit our website www.sleipnergroup.com/patents

Notes

Notes

Notes

© Copyright Sleipner Motor AS, 2021
The information given in the document was correct at the time it was published. However, Sleipner Motor AS can not accept liability for any inaccuracies or omissions it may contain. Continuous product improvement may change the product specifications without notice. Therefore, Sleipner Motor AS can not accept liability for any possible differences between product and document.

Register your product and learn more at www.sleipnergroup.com

SLEIPNER
Ocean born. Tech bred.

SLEIPNER AS
P.O. Box 519
N-1612 Fredrikstad
Norway
www.sleipnergroup.com

Made in Norway

MC_0030